ROBIN

MONARCH

spells comfort at work

Robin is designed as a basic chair to complement Merryfair's range of ergonomic executive chairs. It shares a similar modern appearance and mesh back feature as Fulkrum, Exact, Wing and Wau, thus allowing a consistent furnishing image while meeting budget requirements.

The integrated back and armrest design makes a sturdy, rigid yet lightweight structure. The arms braces the back against reclining weight, while the back reinforces the arms against vertical and side loads.

A permeable mesh backrest makes a smart modern look and also functions to provide ventilation for optimal comfort.

Robin is also a versatile product. Robin with a cantilever sled base makes an elegant visitor chair. A four wheeled version comes in handy for seminars or breakout meetings. A swivel version is also available for desk jobs.

Robin, the ever useful sidekick in any situation.

Robin with a cantilever sled base makes an elegant **side chair** for guest or conference use. Up to four chairs can be stacked on floor.

Model 691 B NA A67 C

Robin is designed to complement Merryfair's range of ergonomic executive chairs.

The integrated back and armrest design makes a sturdy, rigid yet lightweight structure.

Robin, **seminar chair** on castor wheels is multi-purpose for any situation where mobility and rearrangement is appreciated.

Model 691 B NA A67 H4

Robin, **swivel chair** for short-term desk work is simple and easy to maintain. It features seat height, recline-lock and recline tension adjustments.

Model 697 G SH A67 N3

Quality Specifications

Back frame, back caps, and seat shell of polypropylene (100% recyclable) in black colour.

Back Upholstery : 100% High Tenacity Polyester Mesh. This permeable mesh provides elastic support, yet allowing ventilation for optimal comfort.

Seat upholstery in fabric, vinyl or leather on polyurethane foam (recyclable into carpet padding ,wadding etc)

Side Chair : cantilever sled base of 27mm diameter tubular steel (100% recyclable) in choice of epoxy powder coating or chrome plating, equipped with glides in black polypropylene (100% recyclable).

Seminar Chair : 4-leg base of 27mm diameter tubular steel (100% recyclable) in choice of epoxy powder coating or chrome plating, equipped with 50mm diameter dual-wheel castors in black polyamide.

Swivel Chair : Frame of 27mm diameter tubular steel (100% recyclable) in choice of epoxy powder coating or chrome plating. 640mm diameter '*STUDIO'* base of black polypropylene (100% recyclable), equipped with 50mm diameter dual-wheel castors in black polyamide. Swivel Tilt mechanism of mild steel stamping, with tilt tension adjust, upright lock and pneumatic seat height control.

Enviromental

Almost all components (up to 84% 691 NA A67 C) can be easily disassembled using normal tools and separated into 100% recyclable materials (polypropylene, steel).

Recyclable material content is also used in manufacture where possible (up to 45% for 691 NA A67 C) No PVC is used.

Durability & Safety

Robin is designed to BIFMA X5.1:2002 standards for durability and safety.

Model

Dimensions(mm)

Side chair
691 B NA A67 C

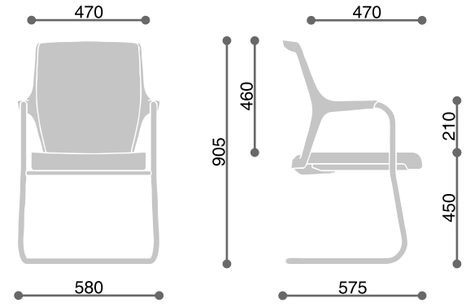

Seminar chair
691 B NA A67 H4

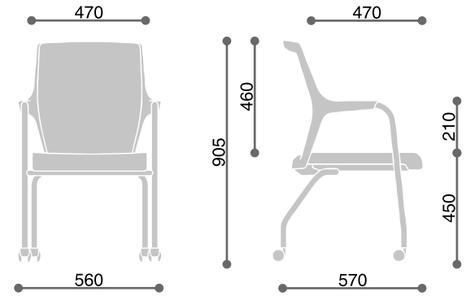

Swivel chair
697 B SH A67 N3

Pneumatic Seat Height Adjustment

Spring Head Mechanism

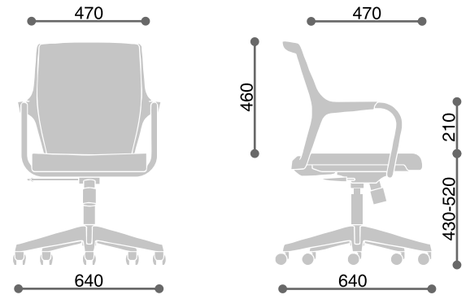

Back Colour Options

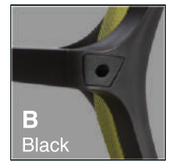

Base Colour Options

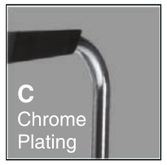

MERRYFAIR®

www.monarchergo.com

spells comfort at work

MONARCH

Corporate Office
Monarch Ergo Pvt. Ltd.
304, Bhuvana Towers, S D Road,
Secunderabad 500 003, Telangana, India.
M: +91 9701116999
contact@monarchergo.com

Ahmedabad : Bangalore : Chennai : Delhi NCR : Hyderabad : Kochi : Kolkata : Mumbai : Pune : Visakhapatnam

Monarch Ergo reserves the right to introduce modifications and withdraw models for continuous improvement without prior notice.